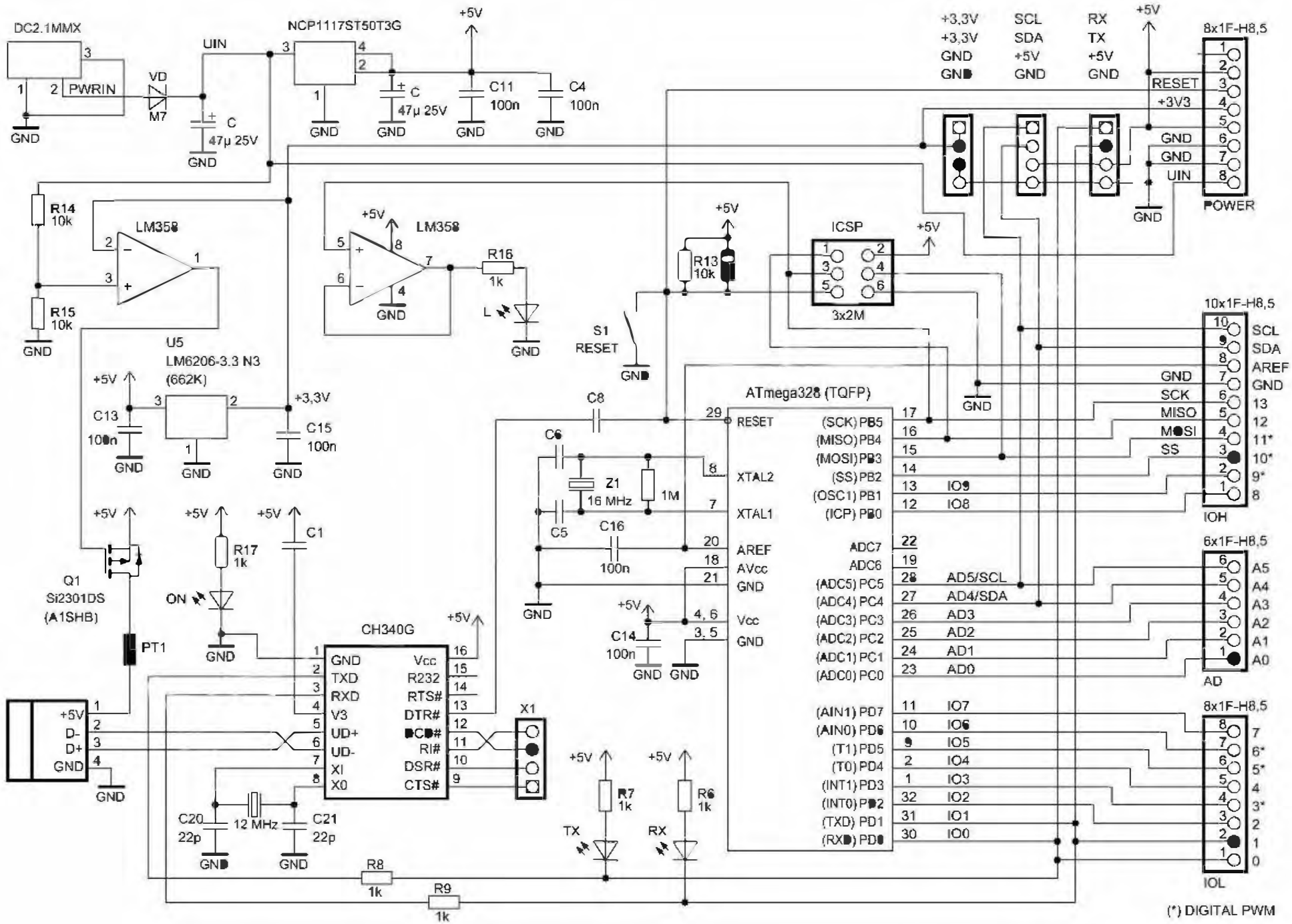
DC2.1MMX
PWRIN
GND
VD
M7
UIN
C
47µ 25V
NCP1117ST50T3G
+5V
C11
100n
C4
100n
+3,3V
+3,3V
GND
GND
SCL
SDA
+5V
GND
RX
TX
+5V
GND
8x1F-H8,5
RESET
+3V3
GND
GND
UIN
POWER
R14
10k
R15
10k
LM358
R16
1k
L
R13
10k
ICSP
3x2M
S1
RESET
U5
LM6206-3.3 N3
(662K)
C13
100n
C15
100n
+3,3V
C8
C6
Z1
16 MHz
1M
C5
C16
100n
C14
100n
ATmega328 (TQFP)
RESET
XTAL2
XTAL1
AREF
AVcc
GND
Vcc
GND
(SCK) PB5
(MISO) PB4
(MOSI) PB3
(SS) PB2
(OSC1) PB1
(ICP) PB0
ADC7
ADC6
(ADC5) PC5
(ADC4) PC4
(ADC3) PC3
(ADC2) PC2
(ADC1) PC1
(ADC0) PC0
(AIN1) PD7
(AIN0) PD6
(T1) PD5
(T0) PD4
(INT1) PD3
(INT0) PD2
(TXD) PD1
(RXD) PD0
10x1F-H8,5
SCL
SDA
AREF
GND
SCK
MISO
MOSI
SS
IO9
IO8
IOH
6x1F-H8,5
AD5/SCL
AD4/SDA
AD3
AD2
AD1
AD0
AD
8x1F-H8,5
IO7
IO6
IO5
IO4
IO3
IO2
IO1
IO0
IOL
Q1
Si2301DS
(A1SHB)
PT1
R17
1k
ON
C1
CH340G
GND
TXD
RXD
V3
UD+
UD-
XI
XO
Vcc
R232
RTS#
DTR#
DCD#
RI#
DSR#
CTS#
X1
+5V
D-
D+
GND
C20
22p
12 MHz
C21
22p
R7
1k
R6
1k
TX
RX
R8
1k
R9
1k
(*) DIGITAL PWM

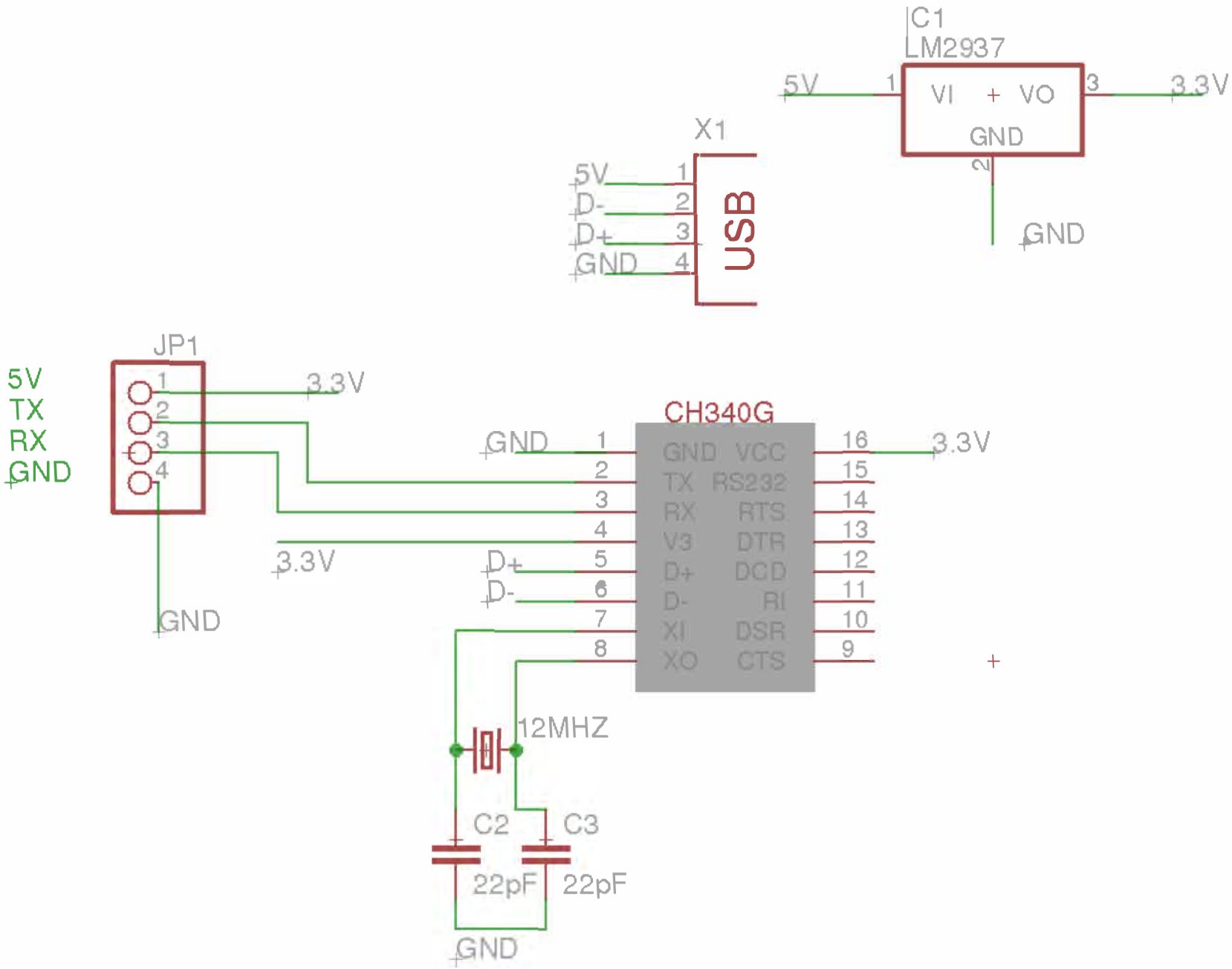
C1
LM2937
5V
1
VI
VO
3
3.3V
GND
2
GND
X1
5V
D-
D+
GND
1
2
3
4
USB
JP1
5V
TX
RX
GND
1
2
3
4
3.3V
GND
CH340G
GND
TX
RX
V3
D+
D-
XI
XO
VCC
RS232
RTS
DTR
DCD
RI
DSR
CTS
1
2
3
4
5
6
7
8
16
15
14
13
12
11
10
9
3.3V
3.3V
D+
D-
12MHZ
C2
C3
22pF
22pF
GND