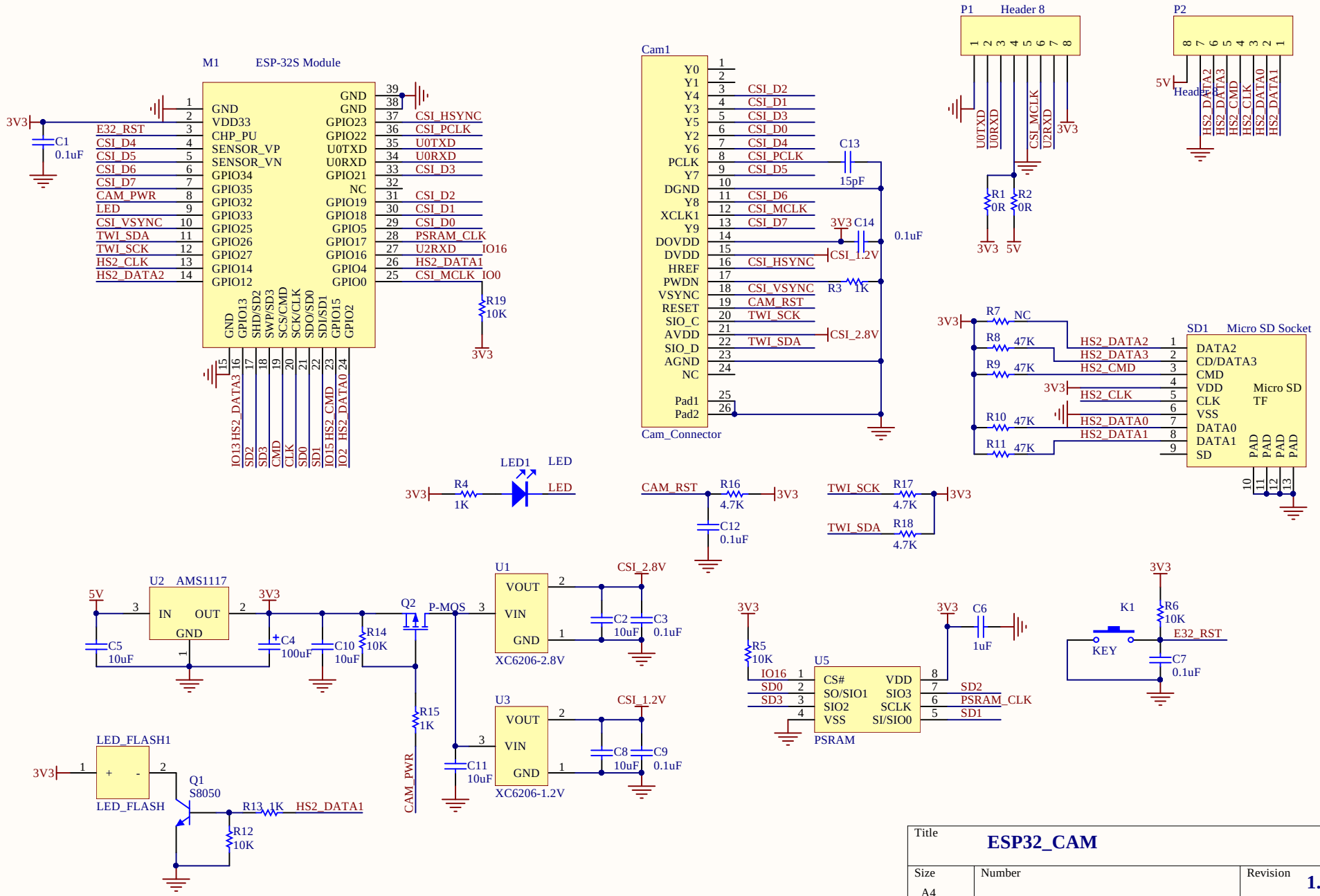
M1 ESP-32S Module
GND
VDD33
CHP_PU
SENSOR_VP
SENSOR_VN
GPIO34
GPIO35
GPIO32
GPIO33
GPIO25
GPIO26
GPIO27
GPIO14
GPIO12
GPIO23
GPIO22
U0TXD
U0RXD
GPIO21
NC
GPIO19
GPIO18
GPIO5
GPIO17
GPIO16
GPIO4
GPIO0
E32_RST
CSI_D4
CSI_D5
CSI_D6
CSI_D7
CAM_PWR
LED
CSI_VSYNC
TWI_SDA
TWI_SCK
HS2_CLK
HS2_DATA2
CSI_HSYNC
CSI_PCLK
CSI_D3
CSI_D2
CSI_D1
CSI_D0
PSRAM_CLK
U2RXD
HS2_DATA1
CSI_MCLK
IO16
IO0
R19 10K
3V3
C1 0.1uF
Cam1
Cam_Connector
CSI_D2
CSI_D1
CSI_D3
CSI_D0
CSI_D4
CSI_PCLK
CSI_D5
CSI_D6
CSI_MCLK
CSI_D7
CSI_HSYNC
CSI_VSYNC
CAM_RST
TWI_SCK
TWI_SDA
C13 15pF
C14 0.1uF
CSI_1.2V
CSI_2.8V
R3 1K
P1 Header 8
U0TXD
U0RXD
CSI_MCLK
U2RXD
R1 0R
R2 0R
P2
Header 8
HS2_DATA2
HS2_DATA3
HS2_CMD
HS2_CLK
HS2_DATA0
HS2_DATA1
5V
SD1 Micro SD Socket
DATA2
CD/DATA3
CMD
VDD
CLK
VSS
DATA0
DATA1
SD
Micro SD TF
PAD
R7 NC
R8 47K
R9 47K
R10 47K
R11 47K
LED1 LED
R4 1K
CAM_RST
R16 4.7K
C12 0.1uF
TWI_SCK
R17 4.7K
TWI_SDA
R18 4.7K
U2 AMS1117
IN
OUT
GND
C5 10uF
C4 100uF
C10 10uF
R14 10K
Q2 P-MOS
R15 1K
CAM_PWR
U1
VOUT
VIN
GND
XC6206-2.8V
C2 10uF
C3 0.1uF
U3
XC6206-1.2V
C8 10uF
C9 0.1uF
C11 10uF
LED_FLASH1
LED_FLASH
Q1 S8050
R13 1K
R12 10K
HS2_DATA1
R5 10K
U5
CS#
SO/SIO1
SIO2
VSS
VDD
SIO3
SCLK
SI/SIO0
PSRAM
IO16
SD0
SD3
SD2
PSRAM_CLK
SD1
C6 1uF
K1
KEY
R6 10K
C7 0.1uF
Title
ESP32_CAM
Size
A4
Number
Revision
1.6
Date: 2018/1/30
Sheet of
File: E:\project2018\..\ESP32_CAM_V1.6.SchDoc
Drawn By: